MER-5800

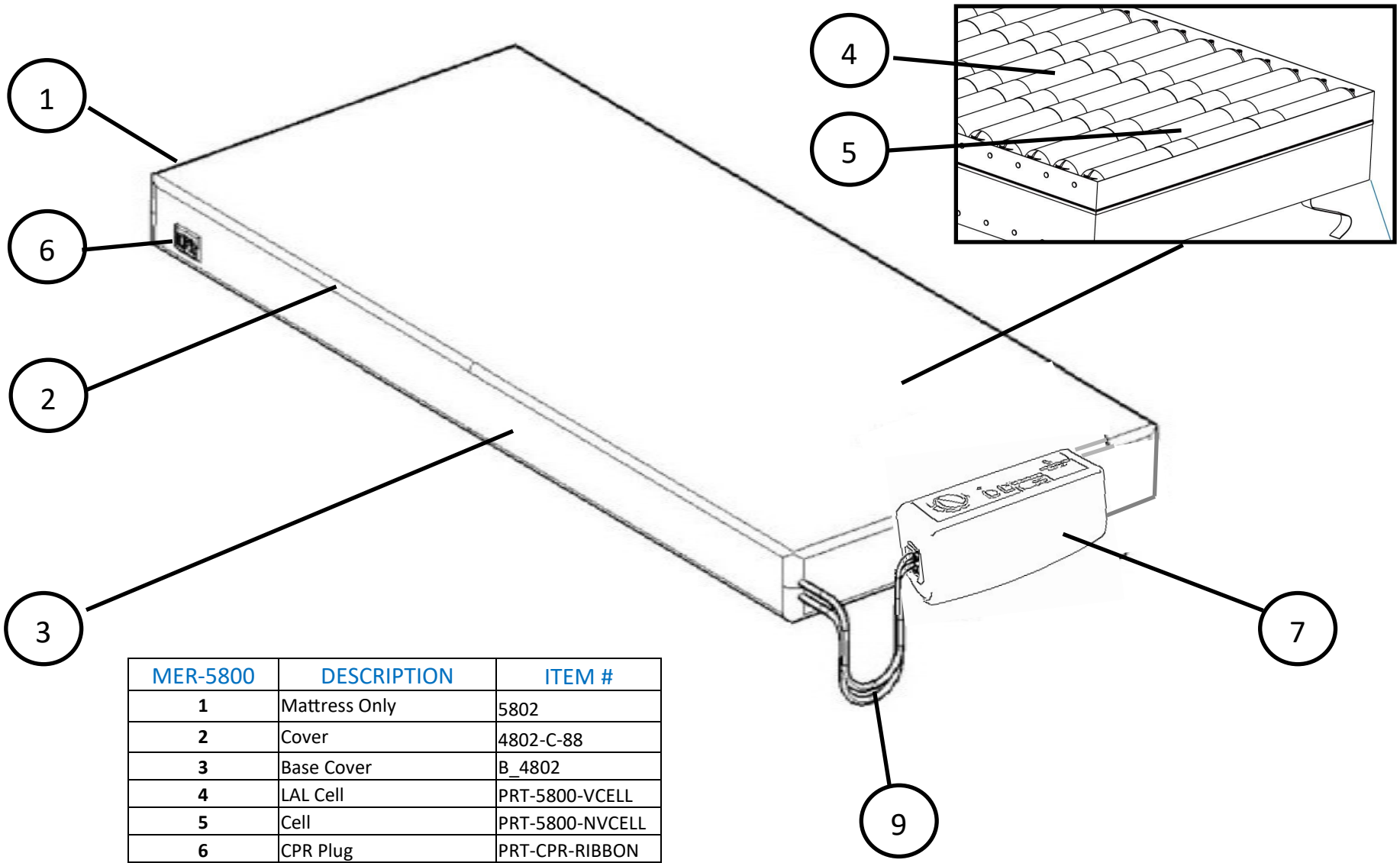

MER-5800	DESCRIPTION	ITEM #
1	Mattress Only	5802
2	Cover	4802-C-88
3	Base Cover	B_4802
4	LAL Cell	PRT-5800-VCELL
5	Cell	PRT-5800-NVCELL
6	CPR Plug	PRT-CPR-RIBBON
7	Pump	4581
8	Mattress Hose	90165
9	Check valve (not shown)	PRT-CHK-VALVE

Images are for reference purposes only and may not resemble the specific APM model.